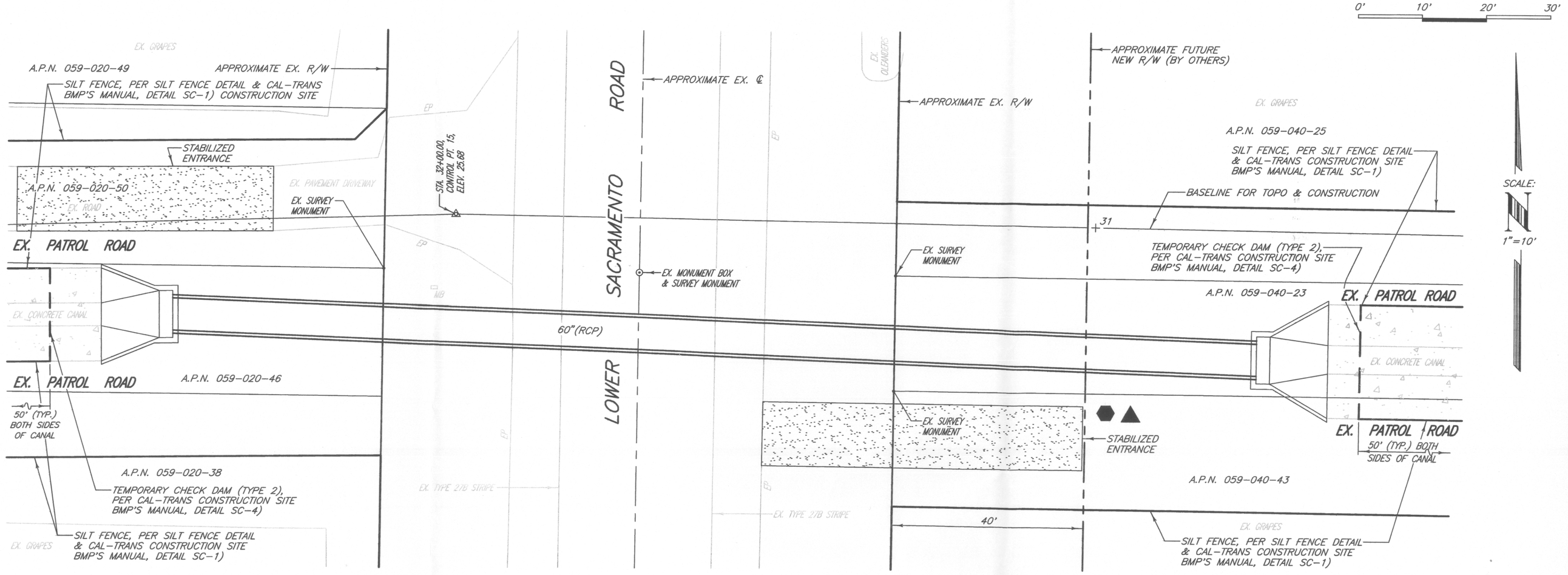

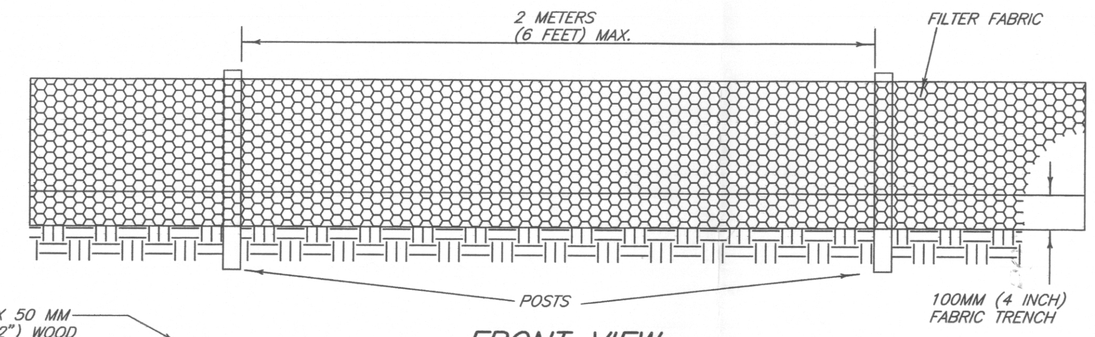

FRONT VIEW

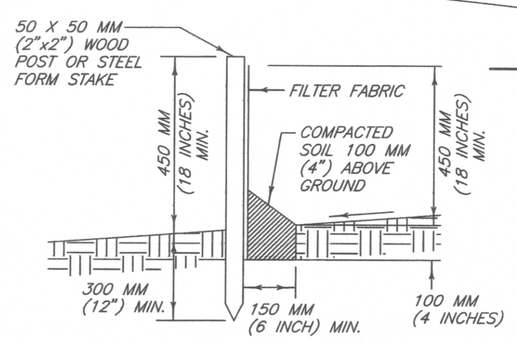

SECTION A-A

SILT FENCE (3)

NO SCALE

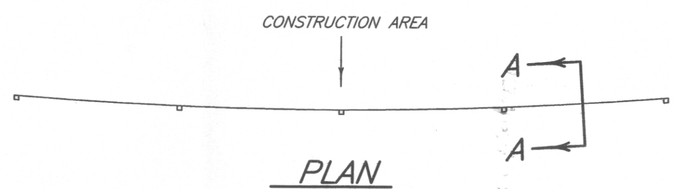

PLAN

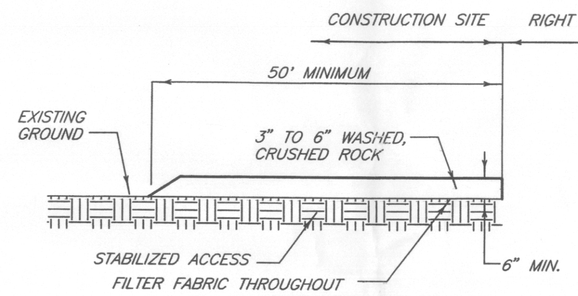

SECTION A-A

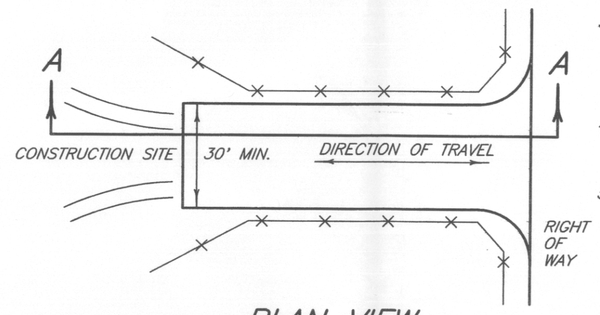

PLAN VIEW

STABILIZED CONSTRUCTION SITE ACCESS

NO SCALE

NOTES:

1) STABILIZED CONSTRUCTION ENTRANCE SHALL BE 3" TO 6" WASHED, CRUSHED ROCK. MATERIAL SHALL BE PLACED TO A MINIMUM THICKNESS OF 12" OR AS RECOMMENDED BY THE SOILS ENGINEER.

2) LENGTH OF ENTRANCE SHALL BE A MINIMUM LENGTH OF 50 FEET. WIDTH MUST BE OF OR GREATER IF NECESSARY TO COVER ALL VEHICULAR INGRESS & EGRESS.

3) THE ENTRANCE SHALL BE KEPT IN GOOD CONDITION BY OCCASIONAL TOP DRESSING WITH AGGREGATE BASE MATERIAL OR CLEANED AS DIRECTED BY THE DIRECTOR.

4) CONTRACTOR SHALL INSPECT CONSTRUCTION ENTRANCE MONTHLY AND AFTER EACH RAINFALL.

5) ALL SEDIMENT DEPOSITED ON PAVED ROADWAY SHALL BE SWEPT AT THE END OF EACH WORKING DAY.

SILT FENCE NOTES:

1) FILTER BARRIER SHALL BE CONSTRUCTED LONG ENOUGH TO EXTEND ACROSS THE EXPECTED FLOW PATH AND AS APPROVED BY THE ADMINISTRATOR. THE MAXIMUM DISTANCE BETWEEN FILTER BARRIERS SHALL BE 4.5 METERS (14.76 FEET) X THE SLOPE EXPRESSED AS A RATIO.

2) FILTER FABRIC SHALL BE PROPYLENE, NYLON, POLYESTER OR ETHYLENE YARN WITH A MINIMUM TENSILE STRENGTH OF 50 LBS. PER LINEAR FOOT AT 20 PERCENT MAXIMUM ELONGATION AND CONTAINING ULTRAVIOLET INHIITORS. FILTER FABRIC SHALL RETAIN A MINIMUM OF 85% OF THE SOIL, BY WEIGHT, BASED ON SIEVE ANALYSIS, BUT IS NOT FINER THAN AN EQUIVALENT OPENING SIZE OF 70.

3) SUPPORT POSTS SHALL BE A MINIMUM 750MM (30 INCH) LONG 50X50 MM (2"X2") WOOD POSTS OR STEEL FORM STAKES DRIVEN A MINIMUM OF 300MM (12 INCHES) INTO THE GROUND. POSTS SHALL BE SPACED A MAXIMUM OF 2 METERS (6 FEET) APART. FABRIC SHALL BE SECURELY FASTENED TO POSTS WITH 13MM (.5 INCH) STAPLES OR 16 GAUGE WIRE TIES SPACED A MAXIMUM OF 150MM (6 INCHES) APART.

4) A 100MM (4 INCH) FABRIC TRENCH SHALL BE EXCAVATED ALONG THE UPHILL SIDE OF FILTER BARRIER POSTS. THE BOTTOM EDGE OF THE FABRIC SHALL EXTEND TO AND ACROSS THE BOTTOM OF THE TRENCH. THE TRENCH SHALL BE BACKFILLED TO 100MM (4 INCHES) ABOVE GROUND AND COMPACTED TO BURY AND SECURE THE BOTTOM OF THE FILTER FABRIC.

5) CONTRACTER SHALL MAKE INSPECTIONS WEEKLY DURING THE WET SEASON, MONTHLY DURING THE DRY SEASON AND IMMEDIATELY AFTER EACH RAINFALL TO DETERMINE IF REPAIRS AND SEDIMENT REMOVEL IS REQUIRED. SEDIMENT SHALL BE REMOVED BEFORE IT HAS REACHED ONE THIRD THE HEIGHT OF THE FILTER FABRIC.

CONCRETE WASHOUT NOTES:

1) THE CONCRETE WASHOUT SHALL BE AN ABOVE GROUND WASHOUT BOX THAT HAS BEEN APPROVED FOR USE BY THE STATE OF CALIFORNIA & THE LOCAL AGENCY OR SELF CONTAINED CONCRETE TRUCK.

2) WASHOUT OF CONCRETE TRUCKS AND/OR CONCRETE MATERIAL SHALL BE IN DESIGNATED AREAS ONLY.

3) WASHOUT AREA TO BE A MIN. OF 50 FT FROM STORM DRAIN INLETS, OPEN DITCHES, OR WATER BODIES.

4) CONCRETE WASTE SHALL BE DISPOSED OF PROPERLY PER THE STATE OF CALIFORNIA & THE LOCAL AGENCY STANDARDS.

STORM WATER POLLUTION PREVENTION

1) THE PROPERTY OWNER AND CONTRACTOR SHALL COMPLY WITH THE PROVISIONS OF THE CALIFORNIA GENERAL CONSTRUCTION ACTIVITY STORM WATER PERMIT AND STATE WATER RESOURCES CONTROL BOARD ORDER NO. 2009-0009-DWQ, COMPLIANCE IS MANDATORY PER WOODBRIDGE IRRIGATION DISTRICT'S STORM WATER POLLUTION PREVENTION PLAN (SWPPP). STATE WATER RESOURCES CONTROL BOARD - WDID #5S39C357155.

2) THE CONTRACTOR IS RESPONSIBLE TO IMPLEMENT CONSTRUCTION SITE BEST MANAGEMENT PRACTICES FOR SEDIMENT CONTROL, WIND EROSION CONTROL, SOILS STABILIZATION, TRACKING CONTROL & WASTE/MATERIALS MANAGEMENT. PER CALTRANS STORM WATER QUALITY HANDBOOK.

3) APPROPRIATE DUST CONTROL SHALL BE PROVIDED, AT THE CONTRACTOR'S EXPENSE, TO MINIMIZE ANY DUST NUISANCE. DUST CONTROL SHALL BE IN ACCORDANCE WITH SECTION 10 OF CALTRANS STANDARD SPECIFICATIONS.

4) ANY AND ALL SEDIMENT AND/OR EROSION CONTROL DETAILS CONTAINED WITHIN THESE PLANS ARE TO BE CONSIDERED AS "REFERENCE DETAILS" ONLY AND THE WOODBRIDGE IRRIGATION DISTRICT APPROVAL OF THESE PLANS AND "REFERENCE DETAILS" DOES NOT RELIEVE THE OWNER/CONTRACTOR FROM COMPLIANCE WITH THE STORM WATER POLLUTION PREVENTION PLAN (SWPPP).

5) THE CONTRACTOR IS ADVISED THAT THE STATE OF CALIFORNIA HAS ADOPTED NATIONAL POLLUTION DISCHARGE ELIMINATION REQUIREMENTS (NPDES) IN ACCORDANCE WITH THE REQUIREMENTS OF THE CLEAN WATER ACT. THIS PROJECT IS SUBJECT TO ALL OF THE REQUIREMENTS CONTAINED IN THOSE ACTS. THE CONTRACTOR SHALL ABIDE BY ALL THE LAWS, ORDINANCES AND REGULATIONS ASSOCIATED WITH THE NPDES AND THE CLEAN WATER ACT.

6) THE STORM WATER POLLUTION PREVENTION PLAN MUST BE MAINTAINED THROUGHOUT THE COURSE OF CONSTRUCTION AND BE AVAILABLE AT THE CONSTRUCTION SITE. THE CONTRACTOR IS ADVISED THAT THEY SHALL CONFORM TO THIS REQUIREMENT AND THAT THEY SHALL IMPLEMENT ALL OF THE MEASURES REQUIRED BY THE STORM WATER POLLUTION PREVENTION PLAN, INCLUDING MAINTENANCE OF DILIGENT RECORD KEEPING AND LOGS AS REQUIRED BY THIS SWPPP.

7) PRIOR TO COMMENCING CONSTRUCTION ACTIVITIES FOR THIS SWPPP, THE CONTRACTOR SHALL FURNISH TO THE OWNER A LIST OF SUBCONTRACTORS FOR EACH CONSTRUCTION PHASE, IDENTIFY THE CONCRETE WASH OUT AREA PLANNED FOR THE PROJECT, IDENTIFY THE MATERIAL STORAGE AREA FOR THE PROJECT, IDENTIFY STABILIZED CONSTRUCTION ACCESS POINTS TO THE SITE, AND IDENTIFY THE INTENDED EROSION CONTROL DEVICES PLANNED TO BE IMPLEMENTED. ONCE THIS INFORMATION IS PROVIDED TO THE OWNER, THE OWNER WILL FILE AN AMENDMENT WITH THE MAINTAINING AGENCY.

8) THE CONTRACTOR SHALL IDENTIFY A CONSTRUCTION WASTE AREA FOR THIS SWPPP. MULTIPLE CONSTRUCTION WASTE AREAS ARE PERMITTED PROVIDED THAT THEY ARE IDENTIFIED AND LOGGED AS A SWPPP AMENDMENT. THE AREAS SHOULD BE CONFINED TO AREAS LEAST SUSCEPTIBLE TO EROSION. ALL WASTE SHALL BE PROPERLY CONTAINED WITHIN THE IDENTIFIED AREA.

9) PETROLEUM PRODUCTS, SOLVENTS, FERTILIZERS, METALS, PAINTS, ETC. SHALL BE STORED IN AREAS THAT PROVIDE COVER (IE: GARAGE, STORAGE BUILDING, COVERED WASTE BINS, ETC.). IF ANY SUCH MATERIALS ARE TO BE KEPT WITHIN THE AREA OF THIS SWPPP, THE CONTRACTOR SHALL IDENTIFY WHERE SUCH PRODUCTS ARE STORED. THIS INFORMATION SHALL BE PROVIDED TO THE OWNER SO THAT AN AMENDMENT CAN BE FILED FOR THIS SWPPP.

10) THE CONTRACTOR SHALL FUEL ALL EQUIPMENT/VEHICLES AT A SINGLE LOCATION. THE CONTRACTOR SHALL PREVENT THE SPILLAGE OF ANY FUELS AND/OR PETROLEUM PRODUCTS FROM ENTERING THE STORM SYSTEM AND/OR CONTAMINATING THE SOIL. IN THE EVENT OF A SPILL, THE CONTRACTOR SHALL IMMEDIATELY CONTAIN THE AREA AND REPORT THE INCIDENT TO THE GOVERNING AGENCIES.

11) THE CONTRACTOR SHALL CONFINE "CLEANUP" OF PAINT, SOLVENTS, ETC. TO AREAS THAT PREVENT SUCH CHEMICALS FROM REACHING THE W.I.D. CANAL AND/OR W.I.D. PIPE.

12) ALL DESIGNATED AREAS FOR STORAGE AND WASTE MATERIALS SHALL BE KEPT CLEAN AT ALL TIMES AND SHALL BE DESIGNATED AWAY FROM DRAIN INLETS.

13) THE APPLICATION OF PESTICIDES, FERTILIZERS, HERBICIDES, PAINTS, ETC. AND THE PLACEMENT OF CONCRETE SHALL BE AVOIDED PRIOR TO APPROACHING STORMS.

14) THE CLEANING OF STREETS, DRIVEWAYS, ETC. SHALL BE MAXIMIZED BY SWEEPING OR OTHER MECHANICAL METHODS. THE USE OF WATER TO CLEAN OFF STREETS, DRIVEWAYS, ETC. IS HIGHLY DISCOURAGED AND SHALL ONLY BE DONE WHEN APPROPRIATE FILTERS ARE PROVIDED AT ALL DRAIN INLETS AND ALL MATERIAL BUILDUP HAS BEEN MECHANICALLY REMOVED.

15) THE PLACEMENT OF PORTABLE TOILETS SHALL NOT BE PERMITTED IN THE STREET RIGHT-OF-WAYS. ALL PORTABLE TOILETS SHALL BE PLACED A MINIMUM OF 10 FEET BEHIND THE RIGHT-OF-WAY AND/OR 10 FEET FROM ANY W.I.D. CANAL IN ORDER TO PREVENT SPILLAGE OF SEWAGE, CHEMICALS, ETC. FROM ENTERING THE STORM WATER SYSTEM.

16) DURING CONSTRUCTION OF THE STRUCTURES THE CONTRACTOR SHALL PREVENT SILTATION FROM ENTERING THE PIPE SYSTEM. THE ENDS OF ALL PIPES SHALL BE PROTECTED BY ANY OF THE FOLLOWING OPTIONS:

A) SECURING FILTER FABRIC AROUND ALL PIPE OPENINGS.
B) SEALING THE END OF PIPES WITH PIPE PLUGS OR WRAPPING THE PIPE ENDS WITH PLASTIC.
C) PROVIDING AN ALTERNATIVE ACCEPTABLE TO THE ADMINISTRATOR OF THE STORM WATER POLLUTION PREVENTION PLAN.

LEGEND

- WASTE AREA
- MATERIALS STORAGE AREA
- (3) SILT FENCE
- CONSTRUCTION ENTRANCE (DETAIL ON SHEET 9)
- WORK ZONE
- SILT FENCE
- TEMPORARY CHECK DAM (TYPE 2)

800-227-2600
CALL BEFORE YOU DIG
USA
UNDERGROUND SERVICE ALERT

REGISTERED PROFESSIONAL ENGINEER
MARK A. SANGUINETTI
EXPIRES 6-30-11
NO. 64,907
CIVIL
STATE OF CALIFORNIA

REVISION NO.	DESCRIPTION	DATE	BY	APRVD. BY

A.R. SANGUINETTI & ASSOCIATES
CONSULTING CIVIL ENGINEERS
1150 W. ROBINHOOD DR., STE. 1C, STOCKTON, CALIFORNIA
MARK A. SANGUINETTI R.C.E. 64907 DATE 12/7/10

W.I.D. - WILKERSON LATERAL
LOWER SACRAMENTO ROAD CROSSING

EROSION CONTROL PLAN

WOODBRIDGE IRRIGATION DISTRICT
SAN JOAQUIN COUNTY, CALIFORNIA

SCALE: AS SHOWN	APPROVED BY:	DATE: 12-7-10	SHEET NO. 9 OF 9 SHEETS
DESIGNED BY: JMS/MAS			PROJECT NO. 2010
DRAWN BY: SLM			
CHECKED BY: SLM/MAS/JMS	GENERAL MANAGER WOODBRIDGE IRRIGATION DISTRICT		
RECORD DWG:			